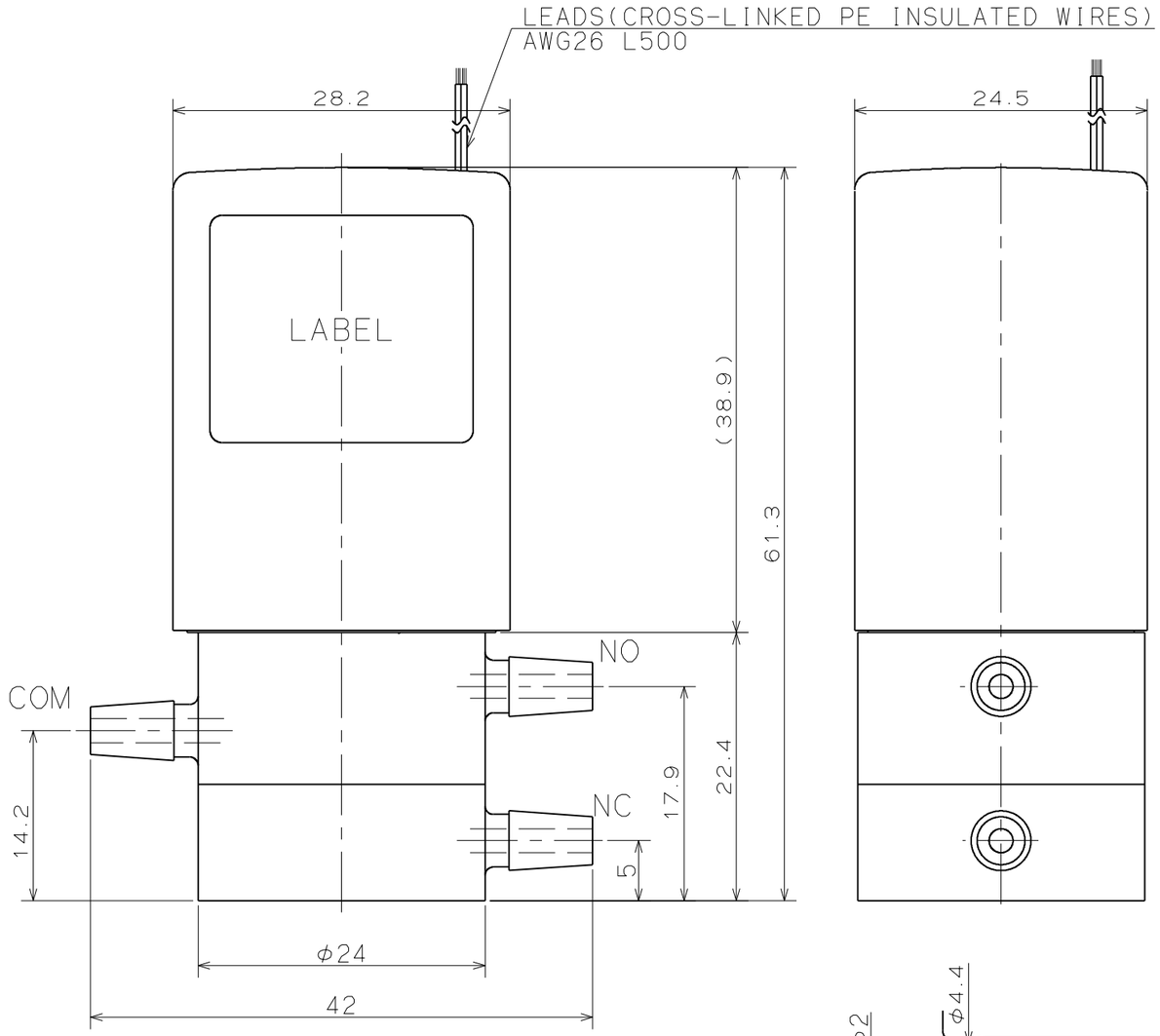


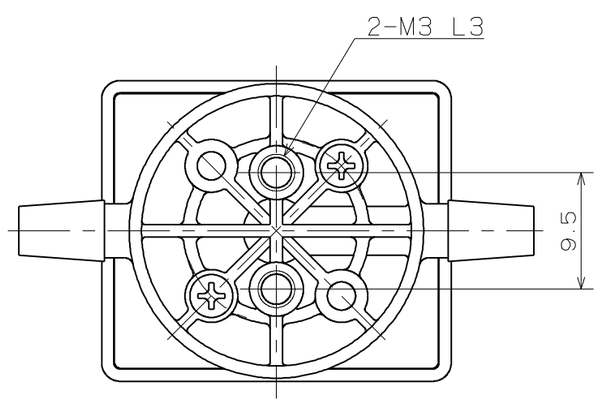


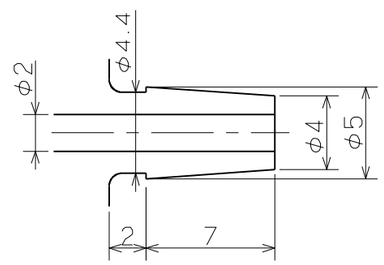


HOSE BARB DETAILS
SCALE : 3/1

# SOLENOID VALVE

FOR REFERENCE ONLY

## SPECIFICATIONS FOR MODEL WTB-3R(K)-N4F(G)

| | | |
|---|---|---|
| ORIFICE DIAMETER | : | 2mm |
| PORT CONNECTION | : | HOSE BARB |
| OPERATING PRESSURE RANGE | : | COM -50 ~ 200kPa {-375mmHg ~ 2bar} |
| | | NC、NO 0 ~ 50kPa {0 ~ 0.5bar} |
| FLUID MEDIA | : | FLUIDS CHEMICALLY COMPATIBLE WITH MATERIALS BELOW |
| MEDIA TEMPERATURE RANGE | : | 5 ~ 50℃ |
| AMBIENT TEMPERATURE RANGE | : | 5 ~ 50℃ |
| RATED VOLTAGE | : | 12VDC、24VDC |
| POWER CONSUMPTION | : | 3.4W |
| DUTY CYCLE | : | CONTINUOUS |
| COIL TEMPERATURE INCREASE | : | MAX. 65℃ FROM ROOM TEMPERATURE |
| INSULATION CLASS | : | CLASS E |
| DIELECTRIC STRENGTH | : | 1000VAC FOR 60s |

NOTE

| MODEL NUMBER | BODY MATERIAL | DISK O RING MATERIAL |
|---|---|---|
| WTB-3R-N4F | PPS | FPM |
| WTB-3R-N4G | PPS | DAIEL PERFLUOR |
| WTB-3K-N4F | PEEK | FPM |
| WTB-3K-N4G | PEEK | DAIEL PERFLUOR |

WETTED MATERIALS

| PART NO | PART NAME | MATERIAL | REQD. | NOTE |
|---|---|---|---|---|
| 5 | DIAPHRAGM | PTFE | 1 | |
| 4 | VALVE BODY A | PPS/PEEK | 1 | |
| 3 | DISK | FPM/DAIEL PERFLUOR | 1 | |
| 2 | O RING | FPM/DAIEL PERFLUOR | 1 | |
| 1 | VALVE BODY B | PPS/PEEK | 1 | |

| SYM. | DATE | DESCRIPTION |
|---|---|---|
| △ | | |
| △ | | |
| △ | | |

REVISION

| SCALE | APPROVED | CHECKED | DRAWN |
|---|---|---|---|
| 2/1 | | | |
| A 3 | | | |

SOLENOID VALVE
WTB-3R(K)-N4F(G)

DRAWING NO
02249-00-S

TAKASAGO ELECTRIC, INC.

MIDORIKU, NAGOYA, JAPAN

2014- 3- 4