Ring Pump®

2G II Series

Features

- Compact box shape makes it possible to pile up plural G II pumps.
- Two different liquids can be flowed by a single pump, using two tubings.

Examples of application

Automatic washing machine
Electrolytic water conditioner
Applications for detergent supply etc.

Main specifications

Flow rate (mL/min) ※	25 35 40 50 70 80
Tubing	Silicone/Pharmed/Norprene/TM-15
Motor/Power source	DC12V、24V
Material of main parts	Case: A B S
Weight (for reference)	Approx. 115g

※ Flow rate can be adjustable by powere voltage.

【Outline view】

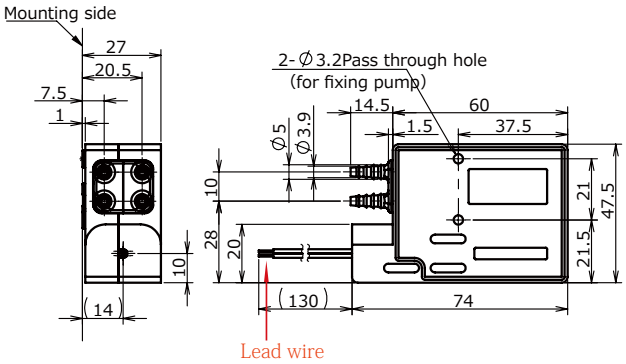

【Mounting plate view】

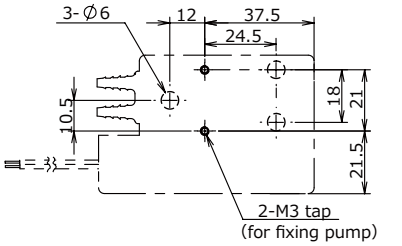

Lead wire should not face downward.

【Flow direction】

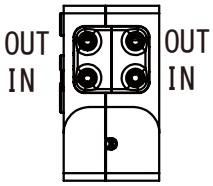

Model Lineup

Model Lineup	Voltage (DC/V)	Flow rate (mL) /min	Flow rate (mL) /rotation	Tubing Type	Tubing ID/OD (mm)	Remarks Motor Rotation
RP-2G II 02 S -25 Z -DC12V	12	25	0.34	Silicone (S)	2 X 4	CCW
RP-2G II 02F-25Z-DC12V	12	25	0.34	PharMed (F)	2 X 4	
RP-2G II 02W-25Z-DC12V	12	25	0.34	TM-15 (W)	2 X 4.2	
RP-2G II 02 S -50Z-DC24V	24	50	0.34	Silicone (S)	2 X 4	CCW
RP-2G II 02F-50Z-DC24V	24	50	0.34	PharMed (F)	2 X 4	
RP-2G II 02W-50Z-DC24V	24	50	0.34	TM-15 (W)	2 X 4.2	
RP-2G II 2.5 S -35Z-DC12V	12	35	0.52	Silicone (S)	2.5 X 4.5	CCW
RP-2G II 2.5 S -70Z-DC24V	24	70	0.52	Silicone (S)	2.5 X 4.5	
RP-2G II 2.8N-40Z-DC12V	12	40	0.58	Norprene (N)	2.8 X 4.8	CCW
RP-2G II 2.8N-80Z-DC24V	24	80	0.58	Norprene(N)	2.8 X 4.8	

PharMed / Norprene: product of Saint-Gobain SA
TM-15 : product of Mitsuboshi Co. Ltd.

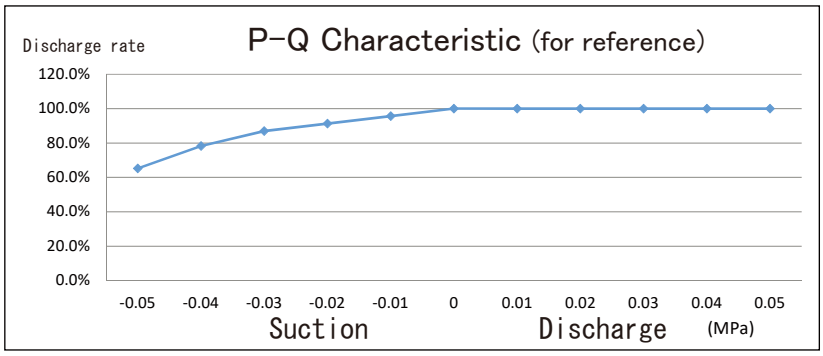

※ Variable by material or ID of tubing.

MPa	-0.05	-0.04	-0.03	-0.02	-0.01	0	0.01	0.02	0.03	0.04	0.05
Discharge rate	65.2%	78.3%	87.0%	91.3%	95.7%	100.0%	100.0%	100.0%	100.0%	100.0%	100.0%