FOR REFERENCE ONLY

SOLENOID VALVE

SPECIFICATIONS FOR MODEL WTB-3-1/4U-17

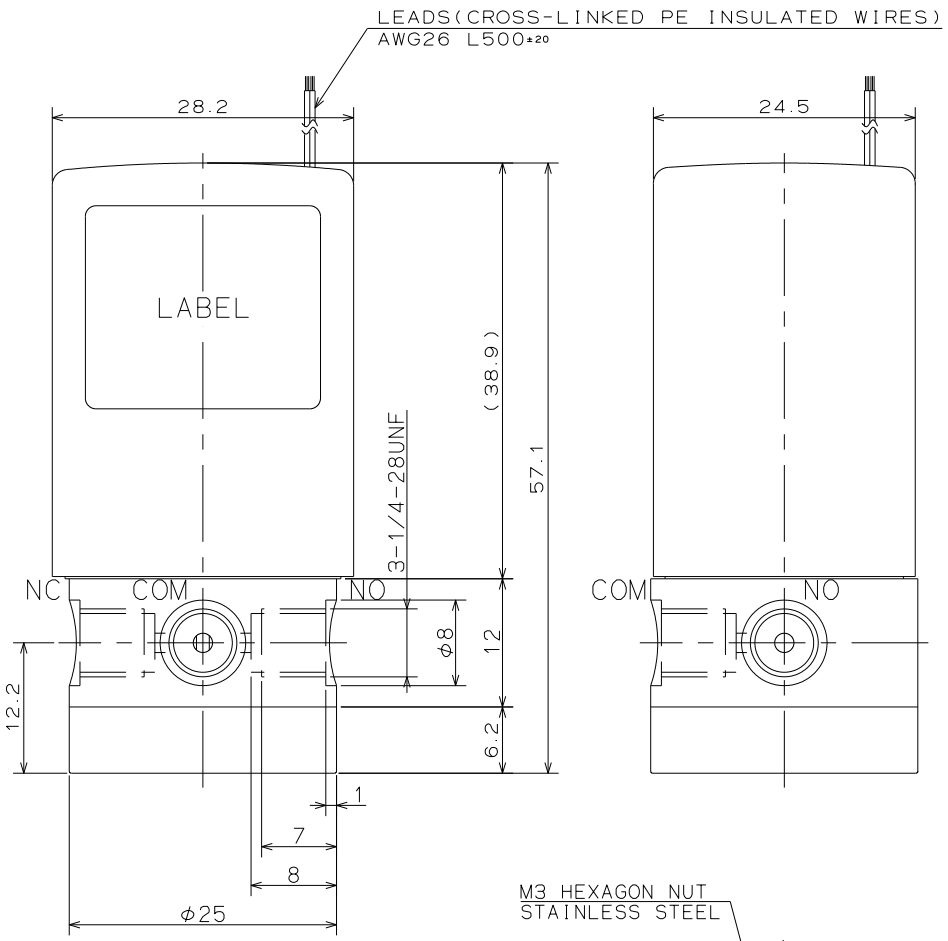

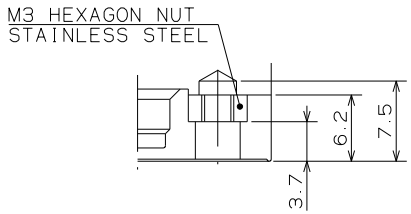

MOUNTING HOLE DETAILS

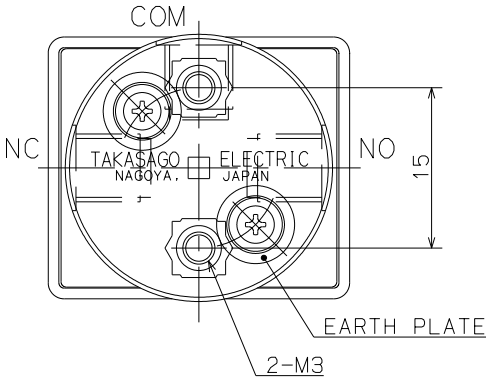

ORIFICE DIAMETER	: 1.6mm
PORT CONNECTION	: 1/4-28UNF
OPERATING PRESSURE RANGE	: COM -90 ~ 300kPa {-675mmHg ~ 3bar} NC、NO 0 ~ 100kPa {0 ~ 1bar}
FLUID MEDIA	: WATER,DI WATER(PURE WATER),DILUENT, CLEANING FLUID
* MEDIA TEMPERATURE RANGE	: 0 ~ 50℃
AMBIENT TEMPERATURE RANGE	: 0 ~ 50℃
RATED VOLTAGE	: 12VDC、24VDC
POWER CONSUMPTION	: 3.4W
DUTY CYCLE	: CONTINUOUS
COIL TEMPERATURE INCREASE	: MAX. 65℃ FROM ROOM TEMPERATURE
INSULATION CLASS	: CLASS E
DIELECTRIC STRENGTH	: 1000VAC FOR 60s

NOTE
THE SPECIFICATIONS MARKED WITH * ARE PROVISIONAL UNTIL VERIFIED BY PROTOTYPES.

WETTED MATERIALS

SYM.	DATE	DESCRIPTION	PART NO	PART NAME	MATERIAL	REQD.	NOTE
△							
△			3	DIAPHRAGM	PTFE	2	
△			2	STEM	Al_2O_3	1	
			1	VALVE BODY	PTFE	1	

REVISION

SCALE	APPROVED	CHECKED	DRAWN
2/1		A. Tada T. Komura	S. Kaji
A 3			

SOLENOID VALVE
WTB-3-1/4U-17

DRAWING NO
18046-00-S

TAKASAGO ELECTRIC, INC.

MIDORIKU, NAGOYA, JAPAN

2018- 3- 1